ACTUATECH
ACTUATOR TECHNOLOGY

Actuator datasheet

GSV240XF10F12

Modification reserved. Rev.date 05.2021.
No guarantee for accuracy.
Older data sheets are invalid

COMPANY WITH MANAGEMENT SYSTEM CERTIFIED BY DNV GL
= ISO 9001 =
= ISO 14001 =

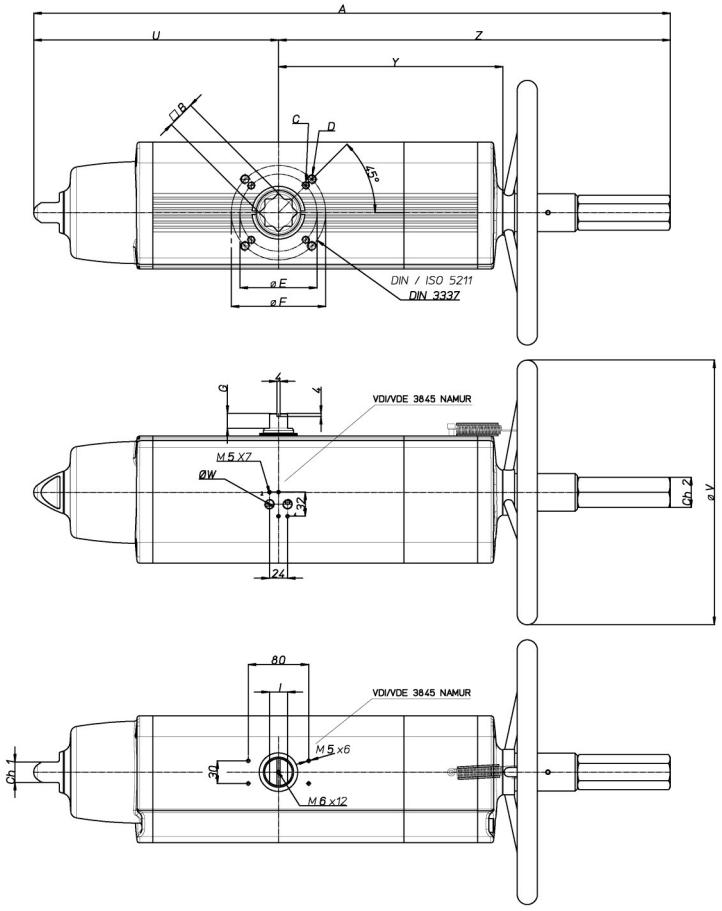

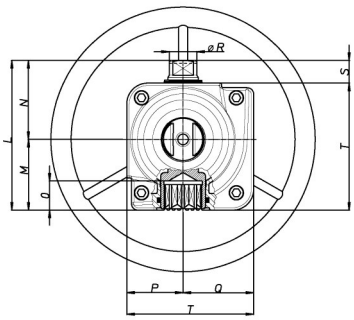

Function

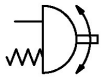

Ref.	Dimensions (mm)
Flange	F10 - F12
C x depth	M10x15
D x depth	M12x18
E	102
F	125
B	27
O	29.5
A	674.4
G	19
I	19
L	164.9
M	72.9
N	92
P	62
Q	72.9
R	29
S	30
T	134.9
U	260.2
V	300
Y	236.4
W	1/4" GAS
Z	414.2
Ch 1	27
Ch 2	40
Ancillaries Attachment	AA2

Spring return Actuators Normally Closed (N.C.) - Output Torque related to rotation angle , in Nm
(0°valve closed 90° valve open)

Spring Torque				Air pressure supply in bar																																
				2,4			2,8			3			3,5			4,2			5			5,6			6			7			8		
SIZE	0°	50°	90°	0°	50°	90°	0°	50°	90°	0°	50°	90°	0°	50°	90°	0°	50°	90°	0°	50°	90°	0°	50°	90°	0°	50°	90°	0°	50°	90°	0°	50°	90°
2,8	80,0	60,0	120,0	91,4	42,9	51,4	120,0	60,0	80,0	134,3	68,6	94,3	170,0	90,0	130,0	220,0	120,0	180,0															
3,5	100,0	75,0	150,0							114,3	53,6	64,3	150,0	75,0	100,0	200,0	105,0	150,0	257,1	139,3	207,1	300,0	165,0	250,0									
4,2	120,0	90,0	180,0										130,0	60,0	70,0	180,0	90,0	120,0	237,1	124,3	177,1	280,0	150,0	220,0	308,6	167,1	248,6	380,0	210,0	320,0	451,4	252,9	391,4
5,6	160,0	120,0	240,0																197,1	94,3	117,1	240,0	120,0	160,0	268,6	137,1	188,6	340,0	180,0	260,0	411,4	222,9	331,4

Technical Data

Max Pressure	** Min Pressure	Rotation	Stroke Adjustment	Screw Stroke Adjustment	*Moving time (sec.)		Operating temperature (°C)
					Opening	Closing	
8.4 bar	1 bar	92° -1° +91°	Not available	-	1.5	1.7	Standard –20°C +80°C High temperature –20°C +150°C Low temperature –50°C +60°C

Weight Kg	Chamber Ø (mm)	Air volume L/cycle	Theoretical n° of turns to close/open starting from neutral position	Rim pull force (N) to obtain the nominal torque	Maximum flange torque values
15.2	100	1.34	16	83.3	F10 = 500 Nm F12 = 1000 Nm

****Attention:**
for "High Temperature"
and "Low Temperature" version,
the Min Pressure is 3 bar.

*The moving time could vary on different operating and installation factors .

Operating Medium
The operating medium shall have a dew point equal to – 20 °C or, to be at least, 10 °C below the ambient temperature (ISO 8573-1, Class 3).
The maximum particle size shall not exceed 40 µm (ISO 8573-1, Class 5).

ACTUATECH S.p.A.
Via S. Lorenzo, 70, 25069 Villa Carcina BS – ITALY Tel. (+39) 0308908142 Fax (+39) 0308908143
http://www.actuatech.com e-mail: actuatech@actuatech.com